Antron Electronics Co.,LTD
安雄電子股份有限公司

Emergency Lighting Automatic Load Control Relay

Model Name	ALCR-G20B
Input Voltage	120-277 Vac
Input Frequency	50/60 Hz
Dimming	0-10v
Surge Rating	3KV
Relay Contact Ratings(SPST)	20A @120Vac 20A @277Vac
Warranty	5 Years TC≦60℃ 3 Years TC≦66℃

Product Specification

(UL pending)

Relay Contact Ratings (SPST) (A) @120V	Relay Contact Ratings (SPST) (A) @277V	Emergency Power Supply Usage (mA)	Dimmer Contact Switching @250V (mA)	Input Power (W)	Input Current (mA)	Operation Temperature (°C)
20	20	120	130	Max. 3	Max. 24	-20-65

Wire Diagram

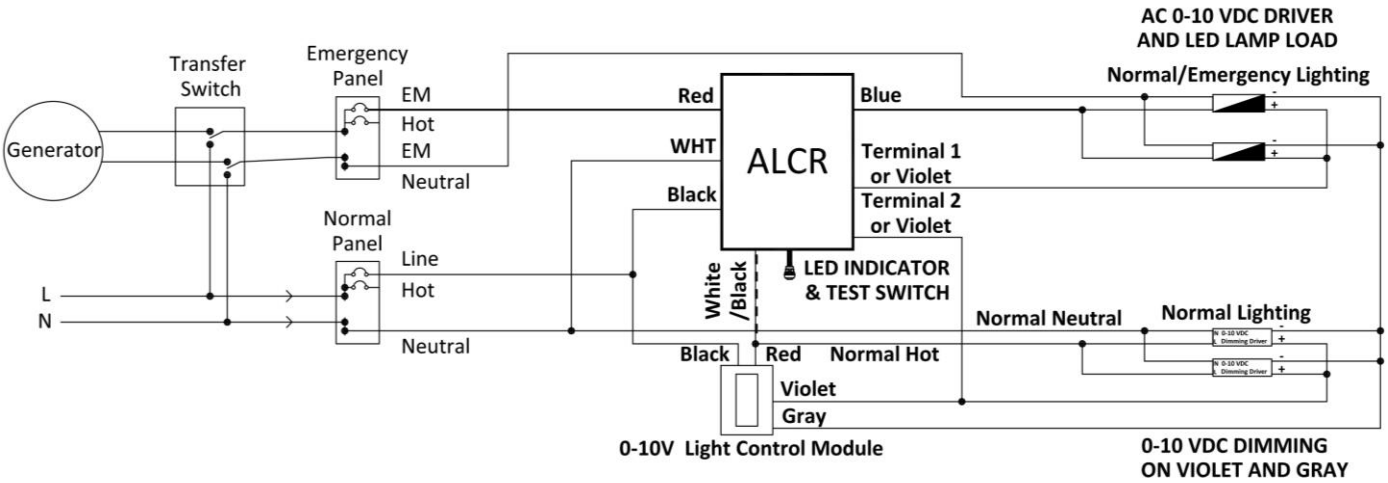

(A) With 0-10V Dimmer

Revised 2021/05/11

www.antron.com.tw Tel:886-6-726-3906/7 Fax:886-6-726-3908 info@antron.com.tw

Antron Electronics Co.,LTD
安雄電子股份有限公司

Emergency Lighting Automatic Load Control Relay

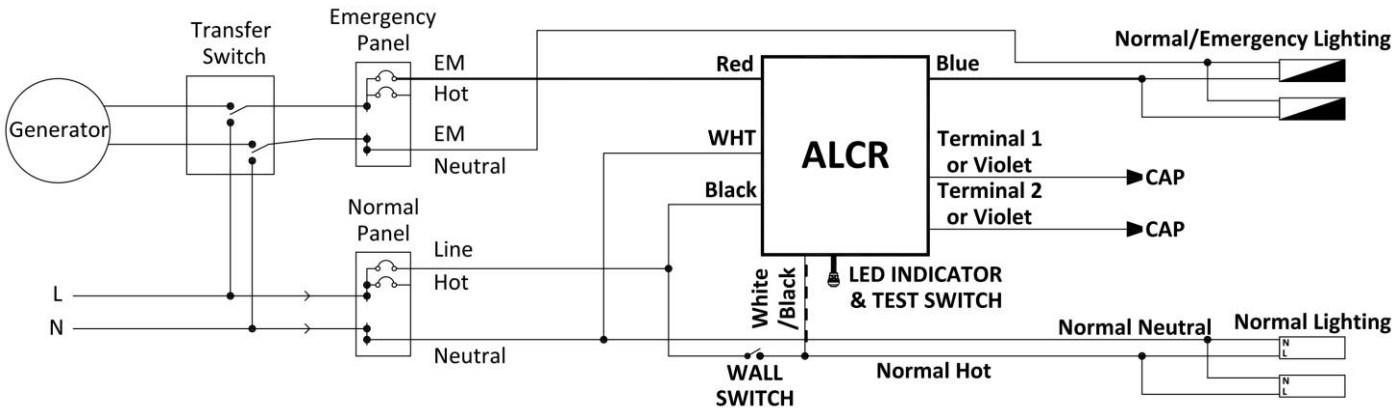

(B)Without Dimmer

Maximum Wiring Distance (at full load) is 18AWG/18Feet

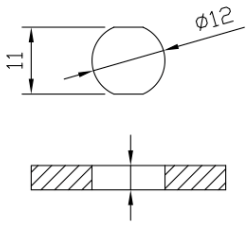

Panel thickness 4mm Max.

Test Switch

Lead Length	Inch	Cm
Black	5.9	15
White	5.9	15
Red	5.9	15
Blue	5.9	15
Violet (Terminal 1)	7.08	18
Violet (Terminal 2)	7.08	18
Test Switch LED INDICATOR	24/6	61/15.24

Enclosure

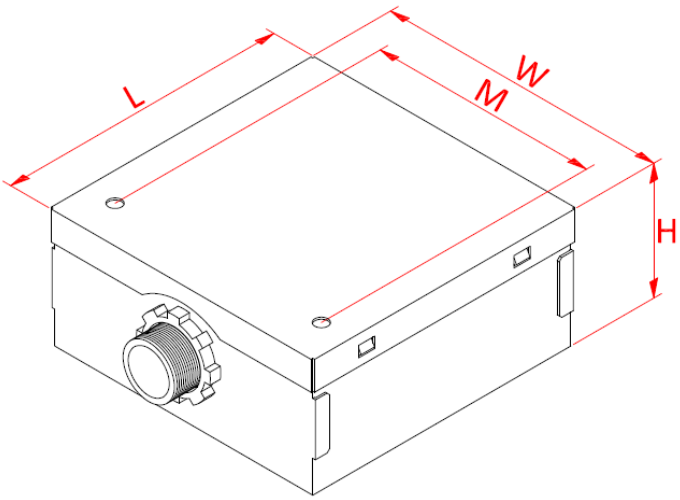

Enclosure	Inch	Cm
Length(L)	4	10.16
Width(W)	4	10.16
Height(H)	1.81	4.6
Mounting(M)	3.13	7.96

Revised 2021/05/11