Antron Electronics Co.,LTD
安雄電子股份有限公司

Junction Box LED Driver

Model Name	AV36S60DJ
Output Model	Constant Voltage
Input Voltage	120-277 Vac
Input Frequency	50/60 Hz
Dimming	3 in 1 (PWM, 1-10V, Resistance) Dimming: 10-100%
Surge Rating	2KV
Warranty	5 Years TC≦75℃ 3 Years 75℃≦TC≦90℃

Product Specification

E328847 IP 65 RoHS 0-10V DIMMER Class2

Output Power (W)	Output Voltage (V)	Output Current (A)	Start Temp. (˚F/˚C)	Tcase Temp. (˚F/˚C)	Input Current (A)	Input Power (W)	Inrush Current (A)	THD (%)	Power Factor	Efficiency (%)
Max. 60	36	0.16-1.66	Min -40/-40	Max. 194/90	0.6@120V 0.26@277V	68	Max. 30	Max. 20	Min. 0.9	Typ. 88

Wire Diagram

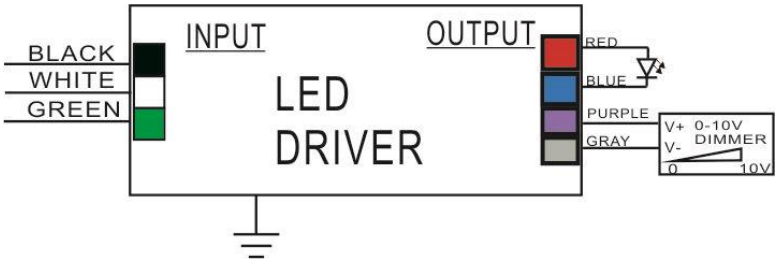

Maximum Wiring Distance (at full load) is 18AWG/18Feet

LED case should be grounded

The driver is suitable for pure LED load only

Enclosure

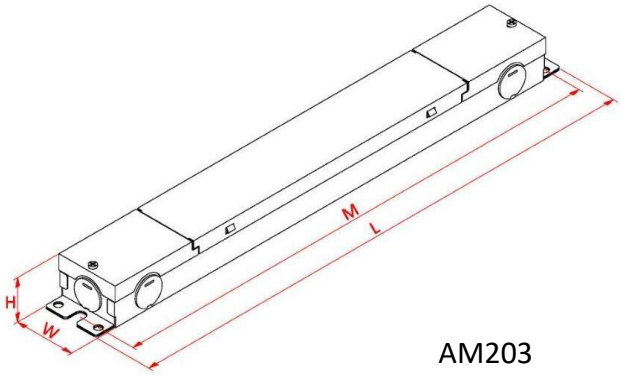

AM203

Enclosure	Inch	Cm
Length(L)	14.2	36.1
Width(W)	1.7	4.3
Height(H)	1.2	3.05
Mounting(M)	13.7	34.8

Published 2020/05/26 Revised 2020/05/26

www.antron.com.tw Tel:886-6-726-3906/7 Fax:886-6-726-3908 info@antron.com.tw