Antron Electronics Co.,LTD
安雄電子股份有限公司

Constant Voltage LED Driver



Model Name	3V36S60D
Output Mode	Constant Voltage
Input Voltage	347 Vac
Input Frequency	50/60 Hz
Dimming	3 in 1 (PWM, 1-10V, Resistance) Dimming: 10-100%
Surge Rating	2KV
Warranty	5 Years TC≦75℃ 3 Years 75℃≦TC≦90℃

Product Specification

E328847 IP 65 RoHS 0-10V DIMMER Class2 TAA

Output Power (W)	Output Voltage (V)	Output Current (A)	Start Temp. (˚F/˚C)	Tcase Temp. (˚F/˚C)	Input Current (A)	Input Power (W)	Inrush Current (A)	THD (%)	Power Factor	Efficiency (%)
Max. 60	36	0.16-1.66	Min -40/-40	Max. 194/90	0.2@347V	71	Max. 35	Max. 20	Min. 0.9	Typ. 88

Wire Diagram

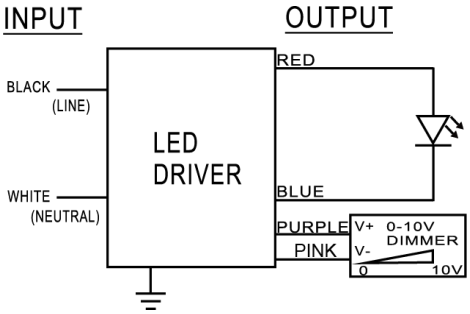

Maximum Wiring Distance (at full load) is 18AWG/18Feet

LED case should be grounded

The driver is suitable for pure LED load only

Lead Length	Inch	Cm
Black	6	15.2
White	6	15.2
Green	NA	NA
Red	6	15.2
Blue	6	15.2
Purple	7.1	18
Pink	7.1	18

Enclosure

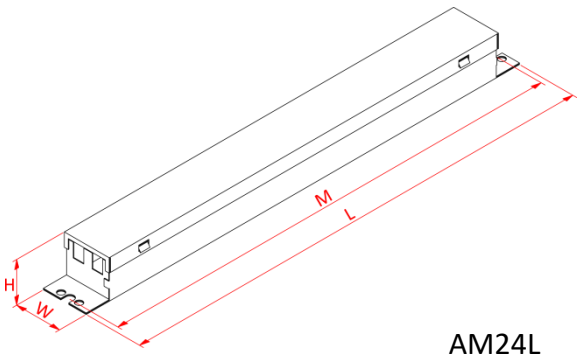

AM24L

Enclosure	Inch	Cm
Length(L)	12.8	32.5
Width(W)	1.34	3.4
Height(H)	1.14	2.9
Mounting(M)	12.5	31.7

Published 2018/04/10 Revised 2023/06/16

www.antron.com.tw Tel:886-6-726-3906/7 Fax:886-6-726-3908 info@antron.com.tw